# 30-AMP NORMALLY OPEN CONTACTORS

SINGLE POLE

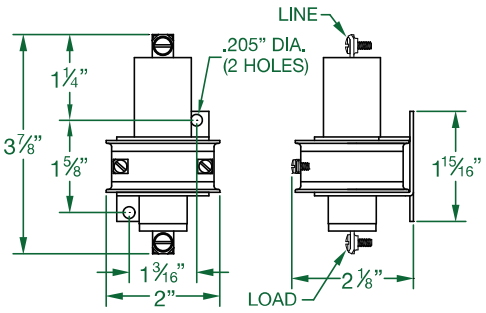


TWO POLE
STANDARD MOUNT

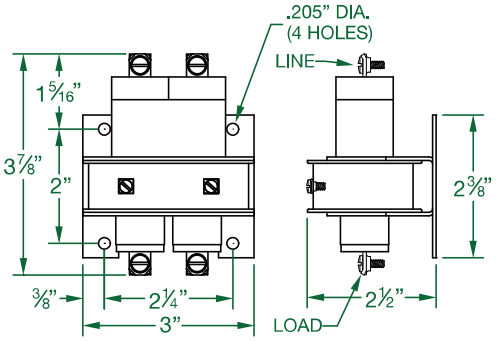


TWO POLE
UNIVERSAL MOUNT

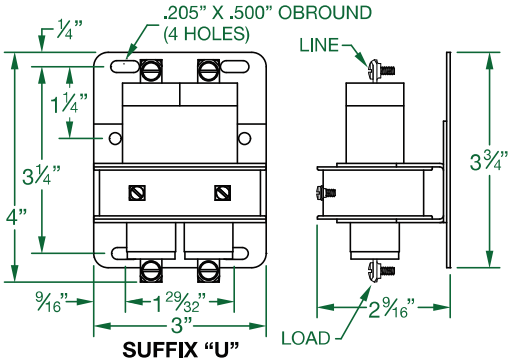


SUFFIX "U"

THREE POLE
STANDARD MOUNT

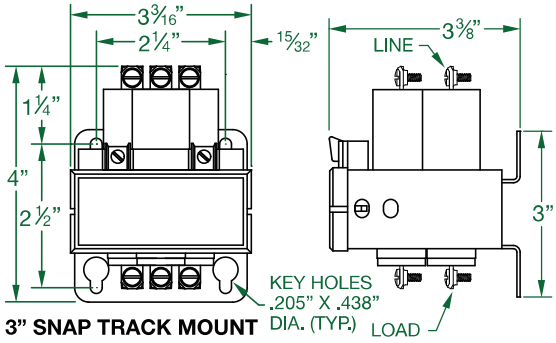


3" SNAP TRACK MOUNT

THREE POLE
UNIVERSAL MOUNT

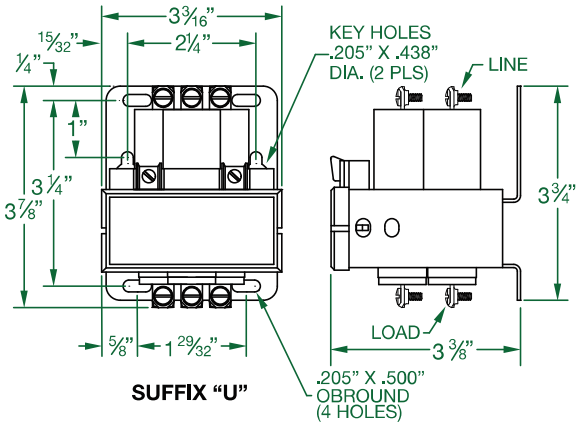


SUFFIX "U"

## GENERAL INFORMATION

The 30-AMP model is designed to save space and simplify mounting methods. The standard mounting bracket on the three pole model allows the unit to be mounted in standard 3" snap track channel. If you do not use snap track mounting, the standard three pole bracket has key hole slots for easy mounting in any panel arrangement. The universal three pole mounting bracket has various mounting holes and key hole slots to meet a variety of mounting centers.

The 30-AMP series is a more compact line with a well proven switch which is the heart of mercury relays. It is the same switch design that is in our 35 and 60-AMP encapsulated MDR's, which have withstood the test of time and millions of cycles in many different applications.

## TYPICAL SPECIFICATIONS

- **ON NORMALLY OPEN UNITS:**
  **OPERATE TIME: 50 milliseconds**
  **RELEASE TIME: 80 milliseconds**
- **CONTACT RESISTANCE:**
  **30-AMP=.003 ohm***
- **DIELECTRIC WITHSTAND:**
  **2500 VAC RMS**
- **LONGEVITY:**
  **MILLIONS OF CYCLES**
- **TEMPERATURE RANGE:**
  **-35°C TO 85°C**
- **COIL TERMINALS:**
  **#6 BINDING HEAD SCREWS**
- **LOAD TERMINALS:**
  **#8 BINDING HEAD SCREWS**
- **UL LISTING: FILE #E62767**
- **C.S.A.: FILE #LR41198**
- **TO ORDER SEE PAGE 4**

FILE #E-62767

FILE #LR 41198

***AFTER CYCLING UNDER LOAD.**

Made in the USA

| Catalog No. | Resistance | Current | V.A. | Watts |
|---|---|---|---|---|
| 30NO-24D | 180 Ω | 133 mA | 3.2 | 3.2 |
| 230NO-24D | 131 Ω | 188 mA | 4.5 | 4.5 |
| 330NO-24D | 73 Ω | 329 mA | 7.9 | 7.9 |
| 30NO-24A | 28 Ω | 316 mA | 7.6 | 2.8 |
| 230NO-24A | 12.5 Ω | 610 mA | 14.6 | 4.7 |
| 330NO-24A | 7.6 Ω | 815 mA | 19.6 | 5.0 |
| 30NO-120A | 725 Ω | 65 mA | 7.8 | 3.1 |
| 230NO-120A | 317 Ω | 118 mA | 14.2 | 4.4 |
| 330NO-120A | 210 Ω | 163 mA | 19.6 | 5.6 |
| 30NO-220A | 3,150 Ω | 27 mA | 6.0 | 2.2 |
| 230NO-220A | 1,300 Ω | 56 mA | 12.3 | 4.1 |
| 330NO-220A | 728 Ω | 86 mA | 18.9 | 5.5 |

# L35/L60-AMP NORMALLY OPEN CONTACTORS

SINGLE POLE
NORMALLY OPEN

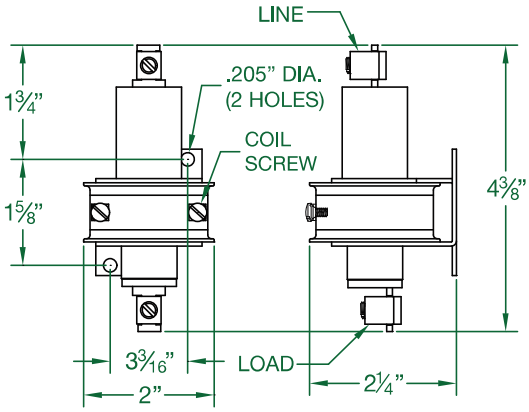


TWO POLE
NORMALLY OPEN

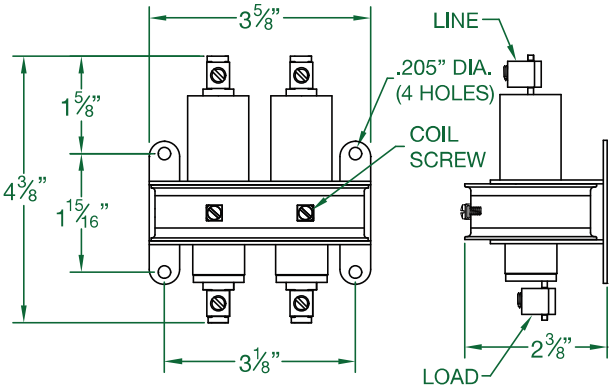


Made in the USA

The "L" version of the 35 and 60-AMP normally open contactors are designed and manufactured to the same high quality specifications as the standard 35 and 60-AMP models. The contactor switch is the same well proven design that has been manufactured since 1975. The mounting centers and physical size are identical to the standard single and two pole 35 and 60-AMP molded versions.

The new design provides a cleaner appearance, and is a more economical design. It is available in the single and two pole models only, with top and bottom load terminals or with lead wires. Noted are the typical specifications and UL and CSA file numbers.

## COIL DATA L35 AND L60 SERIES.

| Catalog No. | | Resistance | Current | V.A. | Watts |
|---|---|---|---|---|---|
| L35NO-24D | L60NO-24D | 188 Ω | 135 mA | 3.3 | 3.3 |
| L235NO-24D | L260NO-24D | 92 Ω | 260 mA | 6.2 | 6.2 |
| L35NO-24A | L60NO-24A | 28 Ω | 325 mA | 7.8 | 3.0 |
| L235NO-24A | L260NO-24A | 10.3 Ω | 660 mA | 15.8 | 4.5 |
| L35NO-120A | L60NO-120A | 725 Ω | 75 mA | 9.0 | 4.0 |
| L235NO-120A | L260NO-120A | 350 Ω | 115 mA | 13.8 | 4.6 |
| L35NO-220A | L60NO-220A | 3,150 Ω | 27 mA | 5.9 | 2.2 |
| L235NO-220A | L260NO-220A | 1,000 Ω | 69 mA | 15.2 | 4.8 |

## TYPICAL SPECIFICATIONS

- **ON NORMALLY OPEN UNITS:**
  **OPERATE TIME: 50 milliseconds**
  **RELEASE TIME: 80 milliseconds**
- **CONTACT RESISTANCE:**
  **35-AMP = .003 ohm***
  **60-AMP = .002 ohm***
- **DIELECTRIC WITHSTAND:**
  **2500 VAC RMS**
- **LONGEVITY:**
  **MILLIONS OF CYCLES**
- **TEMPERATURE RANGE:**
  **-35°C TO 85°C**
- **COIL TERMINALS:**
  **#6 BINDING HEAD SCREWS**
- **LOAD TERMINALS:**
  **PRESSURE CONNECTORS FOR A.W.G. #4-#14 ON 35-AMP AND A.W.G. #2-#8 ON 60-AMP UNITS**
- **UL LISTING:**
  **FILE #E62767 FOR L35 AND L60-AMP N.O. UNITS 1-2 POLES**
- **C.S.A.:**
  **FILE #LR41198 FOR L35 AND L60-AMP N.O. UNITS 1-2 POLES**

FILE #E-62767

FILE #LR 41198

*** AFTER CYCLING UNDER LOAD**

SINGLE POLE—NORMALLY OPEN

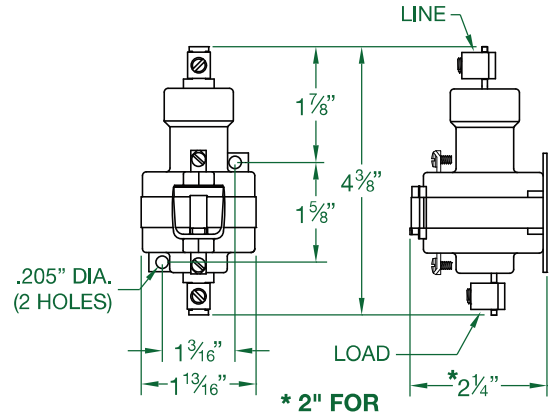


*** 2" FOR METAL STRAP**

TWO POLE—NORMALLY OPEN

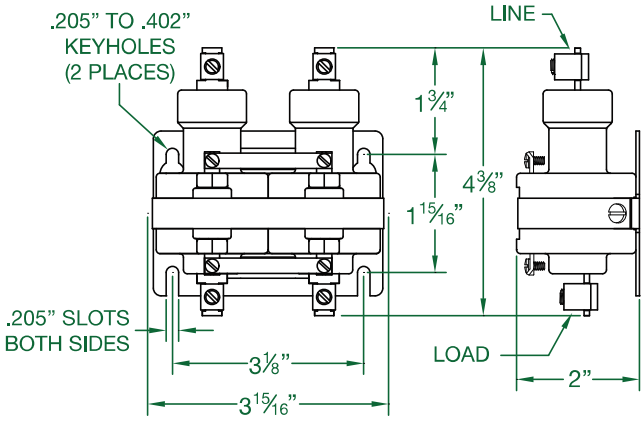


THREE POLE—NORMALLY OPEN

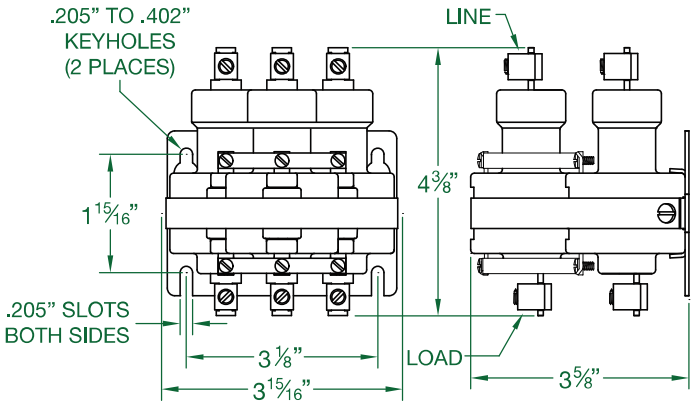


FOUR POLE—NORMALLY OPEN

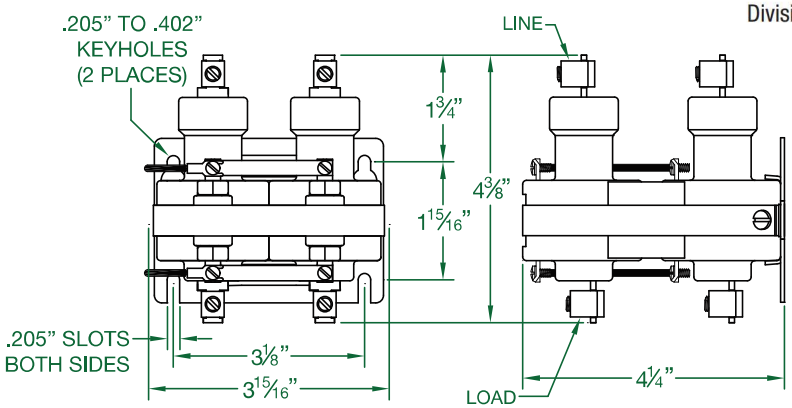


FILE #E-62767 FILE #LR 41198

## TYPICAL SPECIFICATIONS

- **NORMALLY OPEN UNITS:**
  **OPERATE TIME: 50 milliseconds**
  **RELEASE TIME: 80 milliseconds**
- **NORMALLY CLOSED UNITS:**
  **OPERATE TIME: 30 milliseconds**
  **RELEASE TIME: 35 milliseconds**
- **CONTACT RESISTANCE:**
  **35-AMP = .003 ohm***
  **60-AMP = .002 ohm***
- **TEMPERATURE RANGE:**
  **-35°C to 85°C**
- **COIL TERMINALS:**
  **#6 WIRE BINDING SCREWS**
- **LOAD TERMINALS:**
  **PRESSURE CONNECTORS**
  **4 TO 14 AWG ON 35-AMP**
  **2 TO 8 AWG ON 60-AMP**
- **RATINGS:**
  **SEE PAGE 13 FOR COIL DATA**
  **SEE PAGE 14 FOR RATINGS**
- **UL LISTING: FILE #E-62767 FOR**
- **C.S.A.: FILE # LR 41198 FOR**
- **TO ORDER SEE PAGE 4**

* AFTER CYCLING UNDER LOAD

Made in the USA

**TRAFFIC CONTROL (CONSTANT DUTY)**

SP-1132- VOLTAGE- (A or D)
35 AMPS @ 600 VAC
SP-1130- VOLTAGE- (A or D)
60 AMPS @ 480 VAC
A return spring replaces the buffer spring for this application

**HAZARDOUS LOCATIONS**
**SUFFIX "X"**

Available in 1, 2 & 3 Pole Units
Auxiliary devices for use in hazardous locations
For CLASS 1, GROUPS A, B, C, & D – Division 2 only.

# 35/60-AMP NORMALLY OPEN *(Continued)*

## DERATING CHARTS

**35-AMP NORMALLY OPEN**
**LOAD DERATING DUE TO AMBIENT TEMPERATURE**

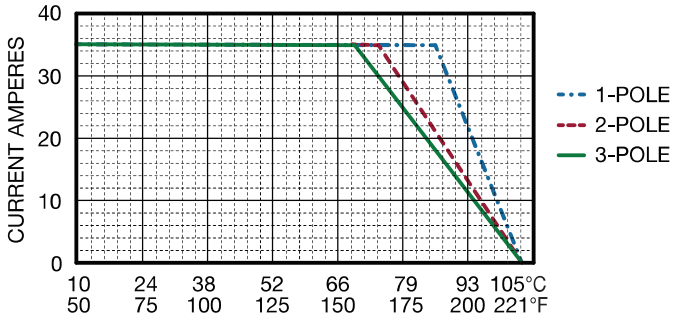


**60-AMP NORMALLY OPEN**
**LOAD DERATING DUE TO AMBIENT TEMPERATURE**

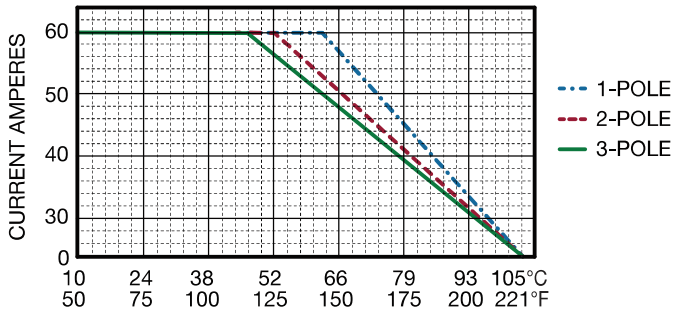


## 35-AMP T-TOP CONTACTORS

SINGLE POLE—NORMALLY OPEN

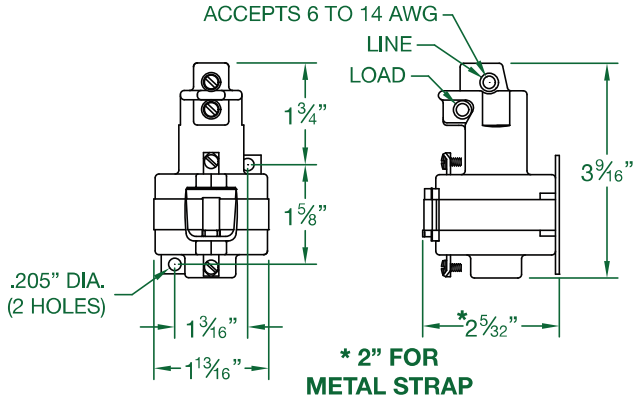


Made in the USA

FILE #E-62767

FILE #LR 41198

TWO POLE—NORMALLY OPEN

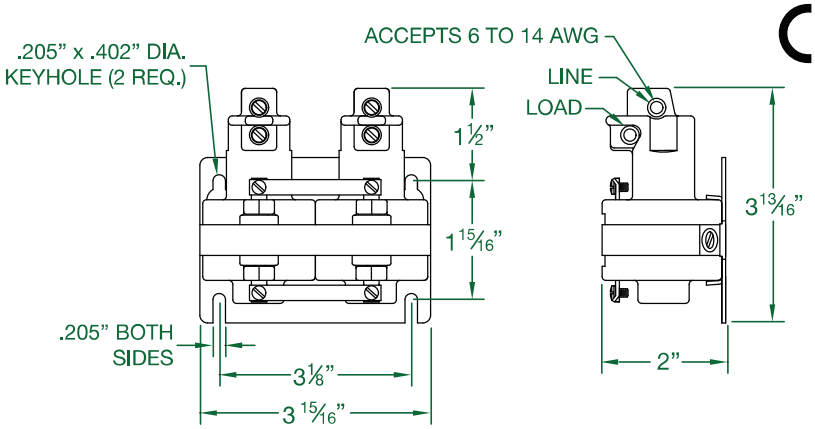


THREE POLE—NORMALLY OPEN

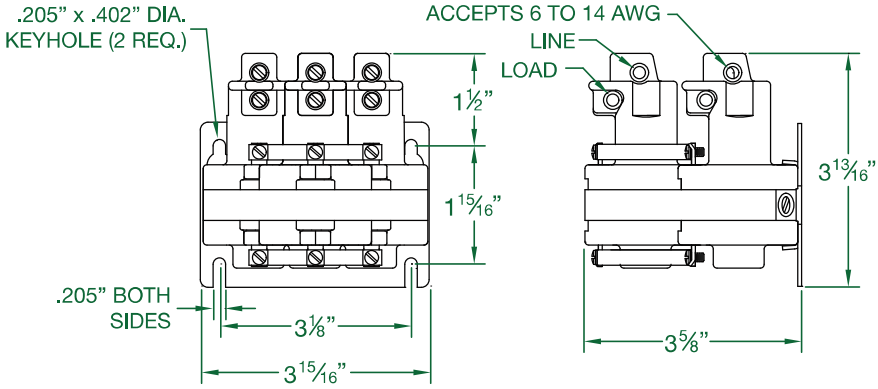

# 35/60-AMP NORMALLY CLOSED CONTACTORS

SIMILAR CONSTRUCTION AS THE NORMALLY OPEN UNITS BUT WITH THE COIL POSITIONED CLOSER TO THE TOP OF THE CONTACTOR.

Made in the USA

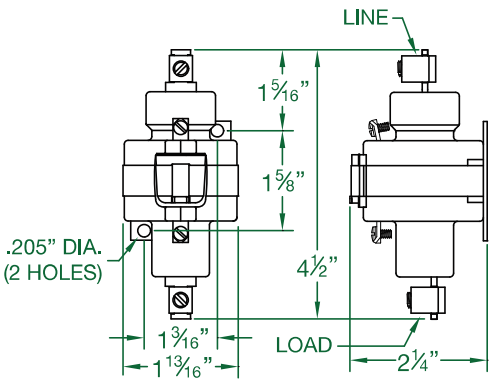


SINGLE POLE

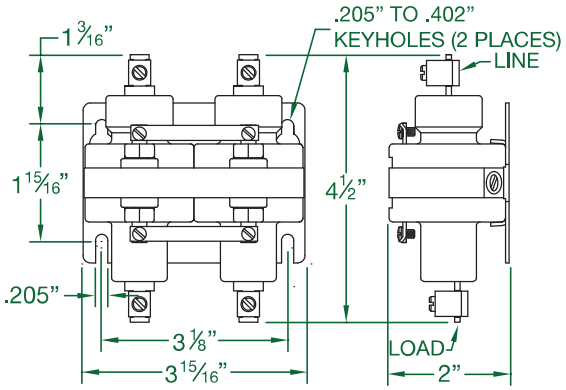


TWO POLE

FILE #E-62767

FILE #LR 41198

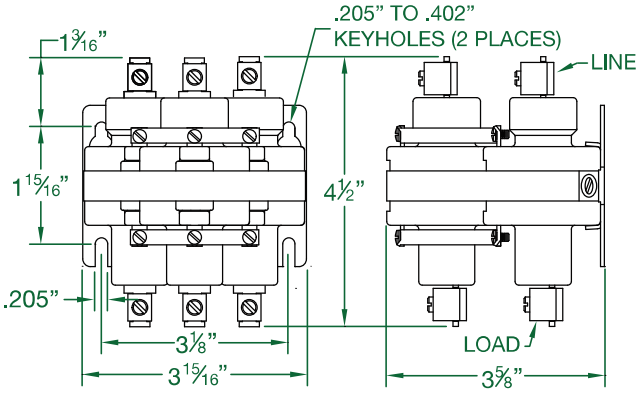


THREE POLE

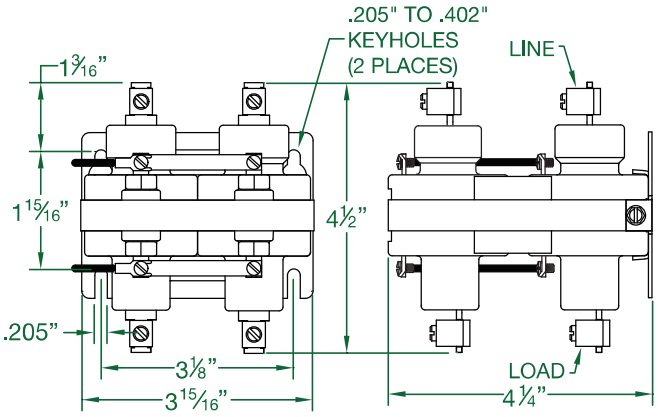


FOUR POLE

# HIGH VOLTAGE CONTACTORS

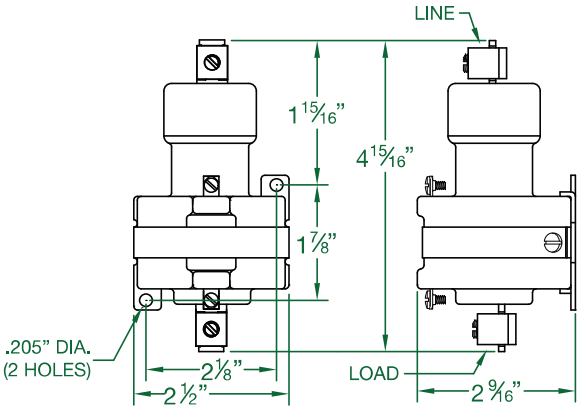


NORMALLY OPEN

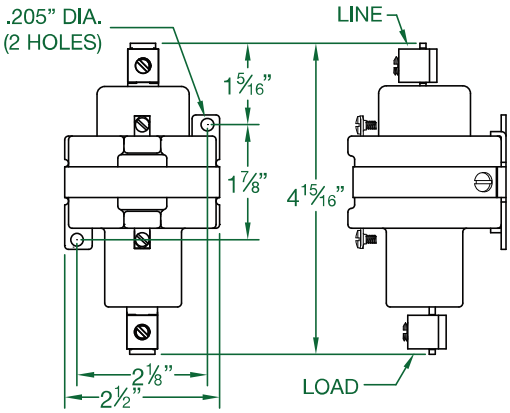


NORMALLY CLOSED

For UV Curing, and Various High Voltage applications. Available in Single Pole, Normally Open, and Normally Closed Units. The coils utilize 6-32 Wire Binding Screws, and the Contacts use Compression type terminals for #2 thru #8 A.W.G. wire.

- **Also available in 2 & 3 pole**

**RATINGS:** 10 AMPS @ 3500 VAC
15 AMPS @ 2500 VAC
AC INDUCTIVE Power Factor .7 or Greater

## Coil Data

| Catalog Number | Coil Voltage | Resistance | Current Draw | Wattage | V.A. |
|---|---|---|---|---|---|
| 100NC-24D-6A | 24 VDC | 65 Ω | 369 mA | 8.9 | 8.9 |
| 100NC-120A-6A | 120 VAC | 380 Ω | 125 mA | 5.9 | 15.0 |
| 100NC-220A-6A | 220 VAC | 1,400 Ω | 76 mA | 8.1 | 16.7 |
| 100NO-12DH-6A | 12 VDC | 16 Ω | 750 mA | 9.0 | 9.0 |
| 100NO-24AH-6A | 24 VAC | 16 Ω | 760 mA | 9.2 | 18.2 |
| 100NO-24DH-6A | 24 VDC | 65 Ω | 369 mA | 8.9 | 8.9 |
| 100NO-120AH-6A | 120 VAC | 380 Ω | 158 mA | 9.5 | 19.0 |
| 100NO-220AH-6A | 220 VAC | 1,320 Ω | 92 mA | 11.2 | 20.2 |

NORMALLY OPEN UNIT

NORMALLY CLOSED UNIT

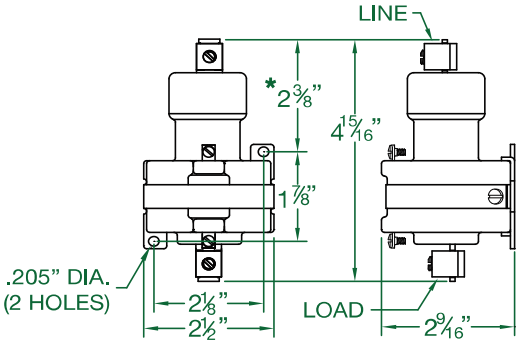


NORMALLY OPEN SHOWN

* THIS DIMENSION IS 1⅜" FOR NORMALLY CLOSED TWO POLE UNITS

TWO POLE—NORMALLY OPEN

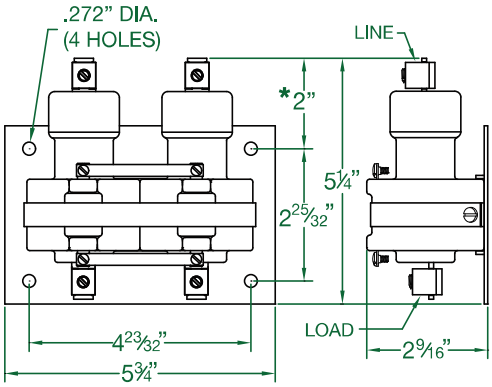


NORMALLY OPEN SHOWN

* THIS DIMENSION IS ¹⁵⁄₁₆" FOR NORMALLY CLOSED TWO POLE UNITS

THREE POLE—NORMALLY OPEN

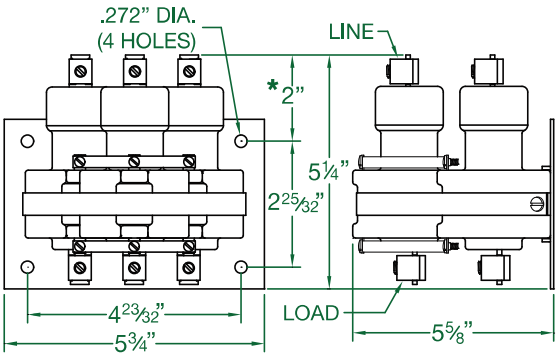


NORMALLY OPEN SHOWN

* THIS DIMENSION IS ¹⁵⁄₁₆" FOR NORMALLY CLOSED TWO POLE UNITS

## TYPICAL SPECIFICATIONS

- ON NORMALLY OPEN UNITS:
  OPERATE TIME: 50 milliseconds
  RELEASE TIME: 80 milliseconds
- ON NORMALLY CLOSED UNITS:
  OPERATE TIME: 45 milliseconds
  RELEASE TIME: 60 milliseconds
- CONTACT RESISTANCE:
  .001 ohm*
- DIELECTRIC WITHSTAND:
  2500 VAC RMS
- LONGEVITY:
  MILLIONS OF CYCLES
- TEMPERATURE RANGE:
  -35°C TO 85°C
- COIL TERMINALS:
  #6 BINDING HEAD SCREWS
- LOAD TERMINALS:
  PRESSURE CONNECTORS.
  STANDARD ACCEPTS A.W.G. #2 to #8.
  FOR A.W.G. #1 to #8, ADD SUFFIX -5 to CATALOG NUMBER (i.e. 100NO-120A-5)
- RATINGS:
  Derate over 240 VAC Res.
  See Page 13 for Coil Data.
  See Page 14 for Ratings.
- TO ORDER SEE PAGE 4.

# S100NO - SERIES

**AVAILABLE IN 1,2 & 3 POLES**
**RATINGS: 100 AMPS @ 480 VAC**
**SEE PAGE 14 FOR RATINGS**

Made in the USA

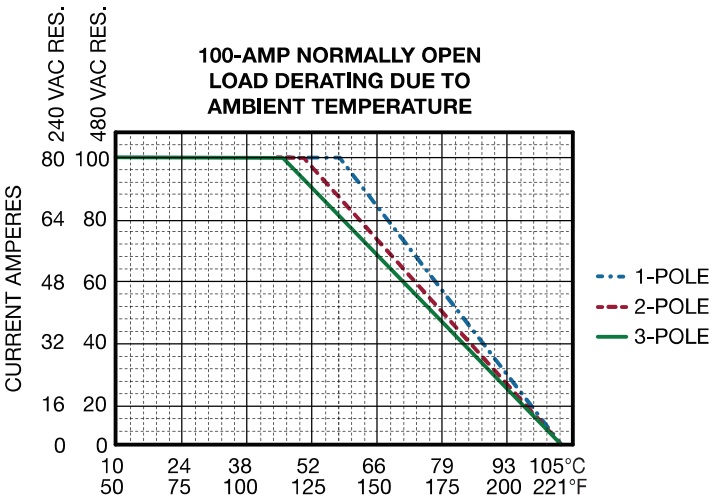


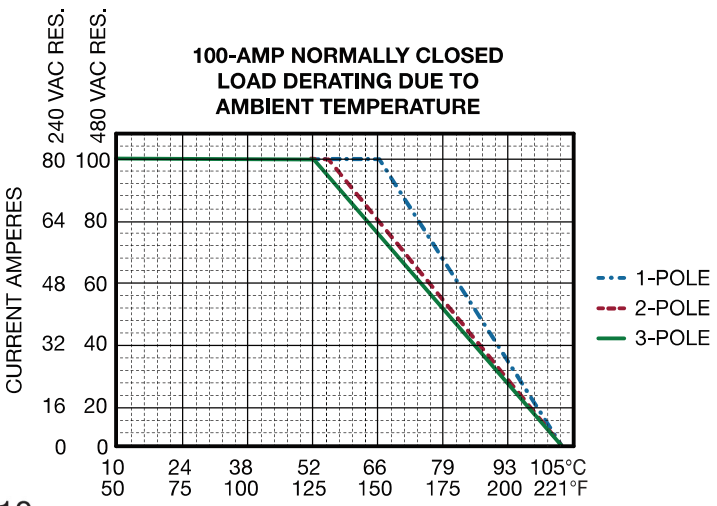

# MERCURY TO MERCURY CONTACTORS

## HOW TO ORDER

**A** - Alternating Current
**D** - Direct Current

**TIME DELAY IN SECONDS**

DOO - 120 A P - 5

**MOUNTING** See page 12 for details
**A** - "A" BRACKET
**U** - UNIVERSAL BRACKET
**P** - PANEL MOUNT
(Blank if Standard Bracket is used)

**COIL VOLTAGE**
(Standard Voltages: 12, 24, 36, 48, 120, 220, 240, 277 & 480)

**CONTACT ACTION**
**DOO:** Delay on Operate, Normally Open
**DORO:** Delay on Operate and Release, Normally Open
**DRO:** Delay on Release, Normally Open
**DORC:** Delay on Operate and Release, Normally Closed
**DRC:** Delay on Release, Normally Closed

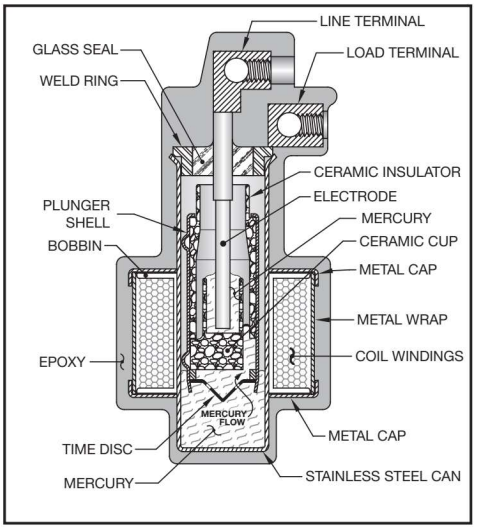


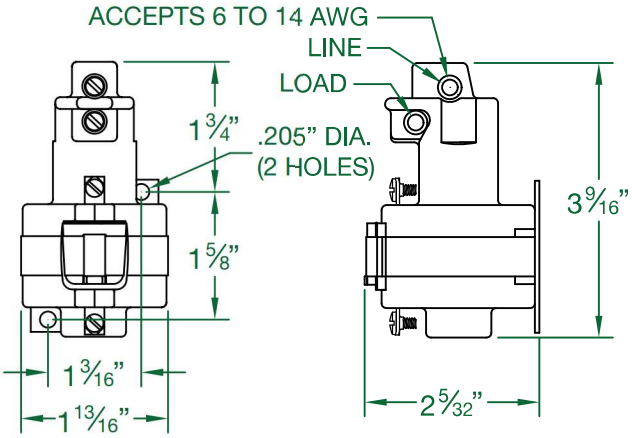


**TIME DELAY RELAYS** Are available with delays of up to 15 seconds on normally open units, and 4 seconds on normally closed units. The timing limitation depends on the contact action required. A time delay function is accomplished in this unit by sizing a hole in the time disc that will control the rate of the mercury flow. This controls the time it will take from the instant the coil is powered until the mercury pools make contact with each other, closing the circuit between the load terminals. Typical contact ratings 10 AMP @ 120 VAC. Pilot duty rating 720 VA. Common coil voltages are available. Standard load terminals are compression type. Coil terminals use #6 binding head screws.

Made in the USA

# OPTIONAL TERMINATIONS

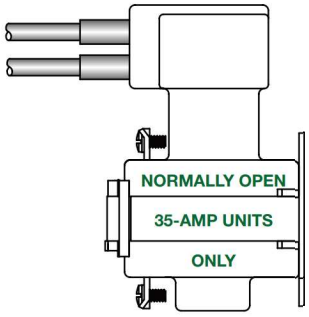


**L-1 (Leaded)**
Designated by the letters "L-1" in the catalog number suffix.
For normally open 35-AMP units.
Height 3-3/16" other dimensions same as standard (page 8).

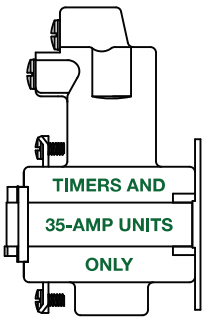


**TS (Top Screws)**
Designated by the letters "TS" in the catalog number suffix.
For timers and 35-AMP units.
(Dimensions same as T-Top see page 8).

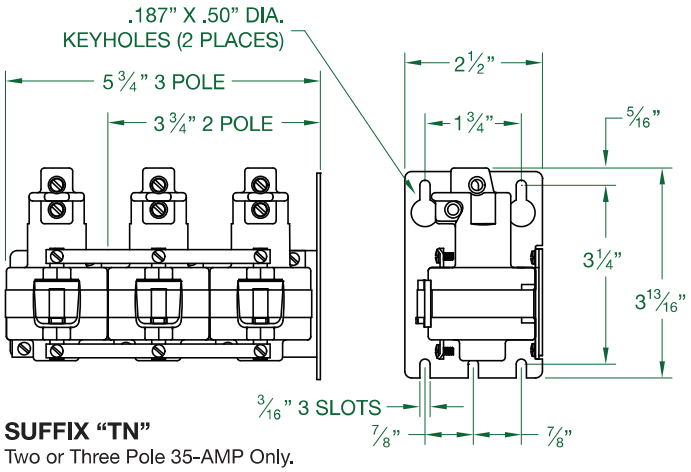


**SUFFIX "TN"**
Two or Three Pole 35-AMP Only.
Load terminals on top for shorter overall height.

# OPTIONAL MOUNTING

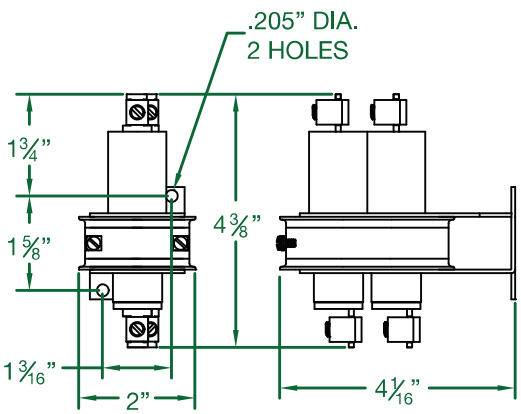


**SP-1214-**
2" wide, narrow mount two pole 30-AMP catalog number SP-1214 followed by the coil voltage, then '"A" for AC & "D" for DC.
Example: SP-1214-120A

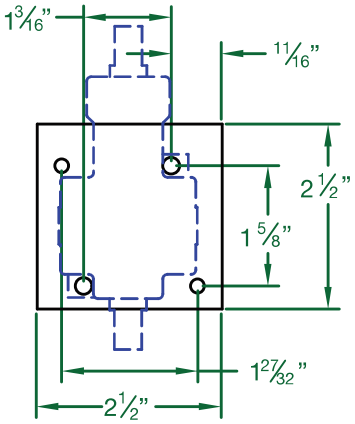


**"P" PANEL MOUNT**
For 35, 60-AMP or standard timer; with standard mounting bracket. The standard mounting bracket attaches to the panel with two 6-32 screws.
Material: 3/8" thick phenolic.

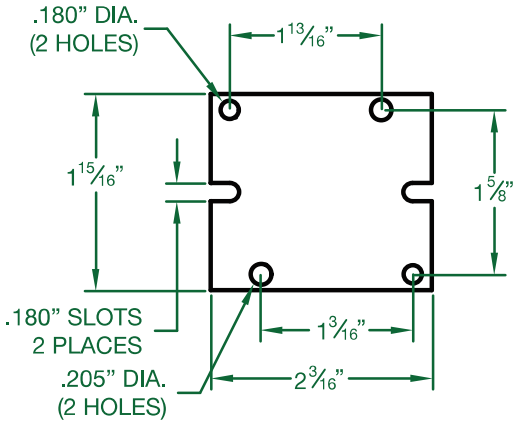


**"U" UNIVERSAL BRACKET**
For single pole, 35 and 60-AMP units, and for timers. This is the standard bracket for hybrid timers.
Material: 16-ga. plated steel.

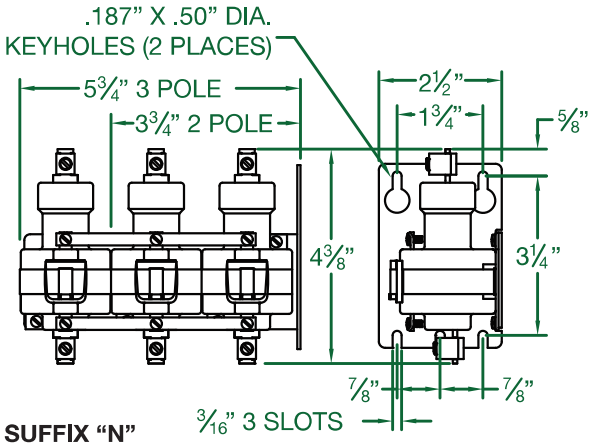


**SUFFIX "N"**
Narrow 2 or 3 pole 35 or 60-AMP units only

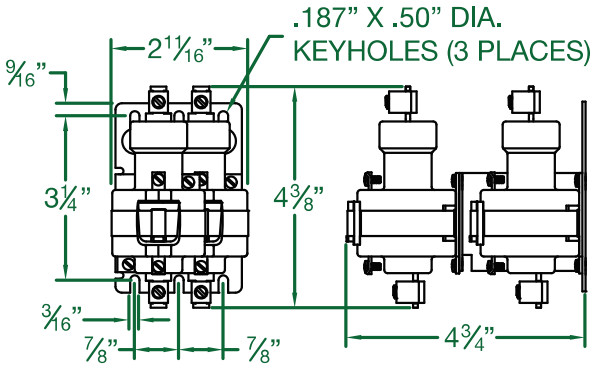


**SUFFIX -19**
Two pole 35 or 60-AMP narrow mounted, front facing, off set, for panel mounting.

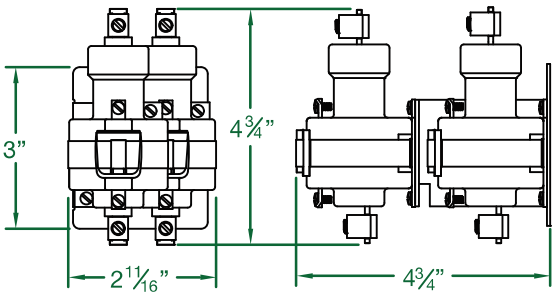


**SUFFIX -"NB"**
Two pole 35 or 60-AMP narrow mounted, front facing, off set, for snap track mounted

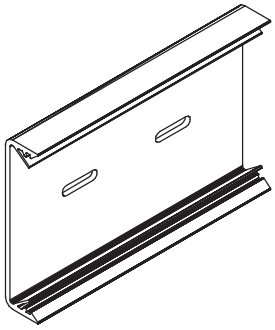

**3" SNAP TRACK™ MOUNTING**
Specify suffix "B" for SNAP TRACK mount on single, two and three pole 35 and 60-AMP series and single and two pole 30-AMP series. SNAP TRACK mount is standard on three pole 30-AMP without suffix.

SNAP TRACK Mounting Channel
Reed Devices Inc; a subsidiary of Augat, Inc.

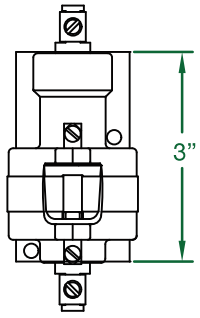


**"B" BRACKET**
For single pole 35 and 60-AMP units, and for timers. Mounts into standard 3" snap-track. Material is 16-ga. plated steel.

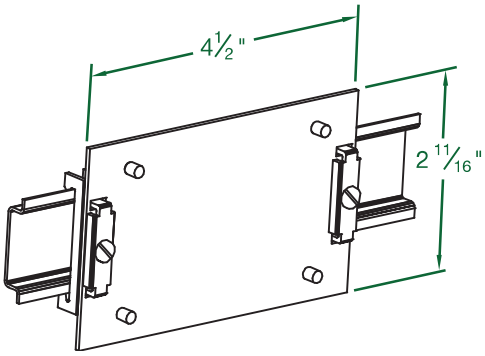


**SUFFIX -17 & -20** Din rail mount 35 mm symmetrical for 35 and 60-AMP units.

# COIL DATA PER POLE RATINGS ON STANDARD COILS

MDI

| CATALOG NUMBER | VOLTAGE | RESISTANCE (D.C. OHMS) | CURRENT (MILLIAMPERES) | VOLT AMPERES (VA) | POWER (WATTS) |
|---|---|---|---|---|---|
| 30 AMP SERIES (SEE PAGE 5) | SEE PAGE 5 | SEE PAGE 5 | SEE PAGE 5 | SEE PAGE 5 | SEE PAGE 5 |
| 35NO-24A | 24 VAC | 50 Ω | 242 mA | 5.8 VA | 2.9 W |
| 35NO-120A | 120 VAC | 1,250 Ω | 53 mA | 6.4 VA | 3.5 W |
| 35NO-208A | 208 VAC | 3,400 Ω | 30 mA | 6.2 VA | 3.1 W |
| 35NO-220A | 220 VAC | 4,800 Ω | 28 mA | 6.2 VA | 3.8 W |
| 35NO-277A | 277 VAC | 7,900 Ω | 20 mA | 5.5 VA | 3.2 W |
| 35NO-480A | 480 VAC | 20,000 Ω | 12 mA | 5.9 VA | 3.0 W |
| 35NO-6D | 6 VDC | 13 Ω | 462 mA | 2.8 VA | 2.8 W |
| 35NO-12D | 12 VDC | 36 Ω | 333 mA | 4.0 VA | 4.0 W |
| 35NO-24D | 24 VDC | 176 Ω | 136 mA | 3.3 VA | 3.3 W |
| 35NO-48D | 48 VDC | 636 Ω | 75 mA | 3.6 VA | 3.6 W |
| 35NO-125D | 125 VDC | 3,400 Ω | 37 mA | 4.6 VA | 4.6 W |
| 35NO-250D | 250 VDC | 14,800 Ω | 17 mA | 4.2 VA | 4.2 W |
| 35NC-24A | 24 VAC | 36 Ω | 310 mA | 7.4 VA | 3.5 W |
| 35NC-120A | 120 VAC | 960 Ω | 65 mA | 7.8 VA | 3.6 W |
| 35NC-220A | 220 VAC | 3,400 Ω | 31 mA | 6.8 VA | 3.3 W |
| 35NC-12D | 12 VDC | 36 Ω | 333 mA | 4.0 VA | 4.0 W |
| 35NC-24D | 24 VDC | 176 Ω | 136 mA | 3.3 VA | 3.3 W |
| 35NC-48D | 48 VDC | 560 Ω | 86 mA | 4.1 VA | 4.1 W |
| 35NC-125D | 125 VDC | 3,400 Ω | 37 mA | 4.6 VA | 4.6 W |
| 60NO-24A | 24 VAC | 50 Ω | 259 mA | 6.2 VA | 3.4 W |
| 60NO-120A | 120 VAC | 1,250 Ω | 48 mA | 5.8 VA | 2.9 W |
| 60NO-208A | 208 VAC | 3,400 Ω | 30 mA | 6.2 VA | 3.1 W |
| 60NO-220A | 220 VAC | 4,800 Ω | 27 mA | 5.9 VA | 3.5 W |
| 60NO-277A | 277 VAC | 7,900 Ω | 19 mA | 5.3 VA | 2.9 W |
| 60NO-480A | 480 VAC | 20,000 Ω | 12 mA | 5.8 VA | 2.9 W |
| 60NO-12D | 12 VDC | 36 Ω | 333 mA | 4.0 VA | 4.0 W |
| 60NO-24D | 24 VDC | 140 Ω | 171 mA | 4.1 VA | 4.1 W |
| 60NO-48D | 48 VDC | 636 Ω | 75 mA | 3.6 VA | 3.6 W |
| 60NO-125D | 125 VDC | 3,400 Ω | 37 mA | 4.6 VA | 4.6 W |
| 60NO-250D | 250 VDC | 14,800 Ω | 17 mA | 4.3 VA | 4.3 W |
| 60NC-24A | 24 VAC | 36 Ω | 325 mA | 7.8 VA | 5.3 W |
| 60NC-120A | 120 VAC | 960 Ω | 69 mA | 8.3 VA | 4.1 W |
| 60NC-220A | 220 VAC | 3,400 Ω | 34 mA | 7.5 VA | 3.9 W |
| 60NC-277A | 277 VAC | 7,900 Ω | 26 mA | 7.3 VA | 5.5 W |
| 60NC-12D | 12 VDC | 36 Ω | 333 mA | 4.0 VA | 4.0 W |
| 60NC-24D | 24 VDC | 140 Ω | 171 mA | 4.1 VA | 4.1 W |
| 60NC-48D | 48 VDC | 560 Ω | 86 mA | 4.1 VA | 4.1 W |
| 60NC-125D | 125 VDC | 3,400 Ω | 37 mA | 4.6 VA | 4.6 W |
| 100NO-24A | 24 VAC | 16 Ω | 646 mA | 15.5 VA | 6.7 W |
| 100NO-120A | 120 VAC | 380 Ω | 137 mA | 16.4 VA | 7.1 W |
| 100NO-220A | 220 VAC | 1,400 Ω | 73 mA | 16.1 VA | 7.5 W |
| 100NO-277A | 277 VAC | 2,400 Ω | 55 mA | 15.2 VA | 7.3 W |
| 100NO-480A | 480 VAC | 6,300 Ω | 35 mA | 16.8 VA | 7.7 W |
| 100NO-24D | 24 VDC | 65 Ω | 369 mA | 8.9 VA | 8.9 W |
| 100NO-48D | 48 VDC | 325 Ω | 148 mA | 7.1 VA | 7.1 W |
| 100NO-125D | 125 VDC | 2,400 Ω | 52 mA | 6.5 VA | 6.5 W |
| 100NC-24A | 24 VAC | 16 Ω | 515 mA | 12.4 VA | 4.2 W |
| 100NC-120A | 120 VAC | 380 Ω | 110 mA | 13.2 VA | 4.6 W |
| 100NC-208A | 220 VAC | 1,400 Ω | 55 mA | 11.4 VA | 4.2 W |
| 100NC-240A | 240 VAC | 1,685 Ω | 49 mA | 11.8 VA | 4.0 W |
| 100NC-480A | 480 VAC | 6,300 Ω | 27 mA | 13.0 VA | 4.6 W |
| 100NC-12D | 12 VDC | 28 Ω | 433 mA | 5.2 VA | 5.2 W |
| 100NC-24D | 24 VDC | 108 Ω | 222 mA | 5.3 VA | 5.3 W |
| 100NC-48D | 48 VDC | 380 Ω | 126 mA | 6.1 VA | 6.1 W |
| 100NC-125D | 125 VDC | 2,400 Ω | 52 mA | 6.5 VA | 6.5 W |

NOTES:
1. Inrush current = 1.5 times the steady state current. (No inrush on DC coils).
2. Minimum operation voltage is 90% of nominal voltage.
3. All AC voltages are 50/60 Hz.
4. For other coils voltages contact the factory
5. Ratings shown are per pole. (Coils are in parallel).